&RQWHQW

3DJH

&RQWHQW

6LJQDOQFH RI VRODU HQHUJ\

6RODU KRW SRWDEOH ZDWHU SUHSDUDWLRQ DQG VXSSRUW RI WKH KHDWLQJ V\VWHP

q2.3 r 7XEH FROOHFWRU

q2.)r )ODW SODWH FROOHFWRU

q5HJXVRO r 6WDWLRQV

q5HJXVRO r 6WDWLRQV

q5HJXVRO ; 8QRr 6WDWLRQ ZLWK KHDW H[FKDQJHU

q5HJXVRO ; 'XRr 6WDWLRQ ZLWK KHDW H[FKDQJHU

+RW SRWDEOH ZDWHU SUHSDUDWLRQ DQG VXSSRUW RI WKH KHDWLQJ V\VWHP t %XIIHU SUHSDUDWLRQ q5HJXPDT ;r t 6\VWHP LOOXVWUDWLRQ

+RW SRWDEOH ZDWHU SUHSDUDWLRQ DQG VXSSRUW RI WKH KHDWLQJ V\VWHP t %XIIHU SUHSDUDWLRQ q5HJXPDT ;r t /RDGLQJ VHFWLRQ E\ VHFWLRQ ZLWK VWDWLRQ q5HJXVRO

q5HJXPDT ; ;= r 6WDWLRQV IRU KRW SRWDEOH ZDWHU SUHSDUDWLRQ

q5HJXPDT .r &DVFDGH FRQWURO VHW IRU KRW SRWDEOH ZDWHU SUHSDUDWLRQ t &RQW

q5HJWURQLFr &RQWURROHUV IRU VRODU DQG KHDWLQJ WHFKQRORJ\

q5HJXFRU :+6r (QHUJ\ VWRUDJH FHQWUH

q+\GURFRUr 6WRUDJH F\OLQGHUV

q6RODUr 'LDSKUDJP H[SDQVLRQ WDQNW WWLQQ JLQH WDQNV t 3LSHV DQG :

)XUWKHU SURGXFWV IRU WKHUPDO VRODU HQHUJ\

6HUYLFH VRIWZDUH

([DPSOH &RQVWUXFWLRQ RI D VRODU SODQW LQ D GHWDFKHG KRXVH

6WDWLRQV IRU VRODU SODQW WKH DXVH RI VRODU HQHUJ\ RRO VLRO DXHHQ EHUJ\ HU KHDW JHQHUDWLRQ FRQQHFWLRQ DUH EHFRPLQJ LV RDU HRQG RPSURH WXQLW\ WR UHGXFH HQHUJ\ LPSRUWDQW FRVWV LQ FRPELQDWLRQ ZLWK JDV KHDWLQJ RLO JURVV FDORUL ; E ERLQHUV

7KH UHDVRQV DUH QRW DW DDW WKH DLVLQJ HQHUJ\ SULFHV DQG WKH FKDQJLQJ HQYLURQPHQWDO FRQVFLRXVQHVV RI FRQVXPHUV

7KHVH VWDWLRQV DUH QRW RQO\ LQVWDOOHG LQ QHZ EXLOGLQJV EXW DOVR H[LVWLQJ V\VWHPV DUH LQFUHDVLQJO\ FRQYHUWHG

)RVVLO IXHO UHVHUYHV ZLOO E
PRUH LPSRUWDQW RYHU WKH Q
IRU WKLV UHDVRQ UHJHQHUDW
ZLOO EHFRPH YLWDO
)RU WKH JRRG RI WKH QH[W JH
FOLPDWH WDUJHWV DQG WKH U
HPLVVLRQV PXVW EHFRPH WKH
HYHU\RQH LQ RXU VRFLHW\
6RODU HQHUJ\ KHOSV WR FRQV
DYDLODEOH WR D VXIILFLHQW
DYRLG &&2 LVVLRQV
6RODU HQHUJ\ LV WKXV RQH RI
SURPLVLQJ HQHUJ\ VRXUFHV DQ
XVHG WR IXOO DGYDQWDJH

$OO RYHU WKH ZRUOG VRODU
DQG PRUH LPSRUWDQW IRU KRV
SUHSDUDWLRQ DQG KHDWLQJ V
6RODU SODQWV UHTXLUH OLWW
DUH QRW RQO\ FULVLV SURRI D
IXWXUH LQYHVWPHQW EXW DOV
WR FLUFXPYHQW RLO DQG JDV
WR D FHUWDLQ H[WHQW /DVW
SODQWV FUHDWH ZRUN SODFHV

$GYDQWDJHV RI VRODU SODQW

- SURWHFWLRQ RI WKH HQYLUR
  UHVRXUFHV DUH FRQVHUYHG
  HPLVVLRQV DUH DYRLGHG
- LQFUHDVHG YDOXH RI UHDO H
  LQFUHDVHG LQGHSHQGHQFH
- FULVLV SURRI

2YHQWURS V\VWHPV IRU VRODU
HQHUJ\ DUH VXLWDEOH IRU KRV
SUHSDUDWLRQ KHDWLQJ V\VW
SURFHVV KHDW VXSSO\

7KH 2YHQWURS VRODU V\VWHPV
FRPSRQHQWV VXFK DV FROOHF
DQG DFFHVVRULHV FDQ EH FRP
H[LVWLQJ DSSOLDQFHV ZKLFK
UHSODFHG 7KH V\VWHPV DOOR
VRODU SODQW FRQILJXUDWLRQ

7KH FRPPRQ VRODU SODQWV DU
IRU KRW SRWDEOH ZDWHU SUH
IRU KHDWLQJ V\VWHP VXSSRUW
RI HQHUJ\ LQ D KRXVH LV XVHG
V\VWHP WKH FRPELQDWLRQ qK
SUHSDUDWLRQ SOXV VXSSRUW
V\VWHPr RIIHUV WKH KLJKHVW
HQHUJ\ VDYLQJ

- 'HWDFKHG KRXVH ZLWK VRODU
- 9DFXXP WXEH FROOHFWRU ILH
  LQVWDOODWLRQ
- 9DFXXP WXEH FROOHFWRU SO
  LQVWDOODWLRQ

oventrop

# 6RODU KRW SRWDEOH ZDWHU VXSSRUW RI WKH KHDW

6RODU KRW SRWDEOH ZDWHU VXSSRUW RI WKH KHDW

'XULQJ WKH VXPPHU PRQWKV WKH HQHUJ\ UHTXLUHG IRU KRW SRWDEOH ZDWHU SUHSDUDWLRQ FDQ EH FRYHUHG FRPSOHWHOO\ GLPHQVLRQ WKH VWDWLRQ SURIHVVLRQDOO\ GHVLJQHG VRODU WKHUPDO SODQW

7KH 2YHQWURS VRODU WKHUPDO VWDWLRQ SRWDEOH ZDWHU SUHSDUDWLRQ RI WKH IROORZLQJ PDLQ FRPSRQHQWV

- WKH FROOHFWRU ILHOG FRQVLVWLQJ RI 2 YDFXXP WXEH FROOHFWRUV RU KLJK FDSDFLW\ IODW SODWH FROOHFWRUV
- WKH VRODU VWDWLRQ q5HJXVRO &RQWURO IRU KHDW WUDQVSRUW DQG WKH OHFHVVDU\ VDIHW\ GHYLFHV
- WKH VRODU EXIIHU VWRUDJH F\OLQGHU ELYDOHQW SRWDEOH ZDWHU

&ROOHFWRU q2.) 2.3r

q%UDZD 0L[r

q5HJXPDW &Or

q5HJXVRO (/r

6RODU EXIIHU VWRUDJH F\OLQGHU

6XSSO\

5HWXUQ

&RQWURO OLQH IRU ERLOHU FRQWURO

7KUHH ZD\ GLYHUWLQJ YDOYH

6RODU KRW SRWDEOH ZDWHU VXSSRUW RI WKH KHDWLQJ V\VWHP

7KH 2YHQWURS VRODU WKHUPDO V\VWHP IRU KRW SRWDEOH ZDWHU SUHSDUDWLRQ DQG VXSSRUW RI WKH KHDWLQJ V\VWHP FRQVLVWLQJ RI WKH IROORZLQJ PDLQ FRPSRQHQWV

- WKH FROOHFWRU ILHOG FRQVLVWLQJ RI 2 YDFXXP WXEH FROOHFWRUV RU KLJK FDSDFLW\ IODW SODWH FROOHFWRUV
- WKH VRODU VWDWLRQ q5HJXVRO ZLWK LQWHJUDWHG FRQWURO IRU &RQWURO RI D VRODU SODQW DQG LQ WKH QHFHVVDU\ VDIHW\ GHYLFHV
- 7KH H[VWLQJ ERLOHU FDQ EH FRQWUROOHG DFWLYDWHG
- WKH VRODU EXIIHU VWRUDJH F\OLQGHU EXIIHU VWRUDJH F\OLQGHU

&ROOHFWRU q2.) 2.3r

6RODU EXIIHU VWRUDJH F\OLQGHU

q5HJXPDW 0 r

q5HJXPDT ;r

q5HJXVRO (/r

6XSSO\

5HWXUQ

&RQWURO OLQH IRU ERLOHU FRQWURO

7KUHH ZD\ GLYHUWLQJ YDOYH

,QWHUQDO WHUPLQDO

)ODW SODWH FROOHFWRUV q2.) &. &6 r FDQ EH XVHG IRU KHDWLQJ RI DQG VZLPPLQJ SRRO ZDWHU DQG IR VXSSRUW RI WKH KHDWLQJ V\VWHP FROOHFWRU FDQ EH PRXQWHG KRU YHUWLFDOO\ DQG LV VXLWDEOH IRU LQVWDOODWLRQ URRI LQWHJUDWL IUHHVWDQGLQJ LQVWDOODWLRQ ;D LQVWDOODWLRQ

'HSHQGLQJ RQ WKH W\SH RI LQVWD VHWV IRU WZR FROOHFWRUV H[WH HDFK DGGLWLRQDO FROOHFWRU DQ FROOHFWRU VHW DUH DYDLODEOH SUHDVVHPEOHG UDLO V\VWHPV IRU ;DW URRI LQVWDOODWLRQ DOORZ I UDWLRQDO LQVWDOODWLRQ RQ VLW $OO :[LQJ HOHPHQWV DUH HDVLO\ DOORZ IRU D WLPH VDYLQJ LQVWDO

7KH DEVRUEHU PDGH RI DOXPLQLXP FRQGXFWLQJ VWHHO VKHHW DQG FR FRQQHFWHG WR WKH VRODU FLUFXI FROOHFWRU FRQQHFWLRQV ZLWK S FRQQHFWLRQ

7KH ;DW SODWH FROOHFWRUV DUH RQH DQRWKHU E\ XVLQJ ;H[LEOH VV FRUUXJDWHG SLSHV 7KHUPDO FRQ H[SDQVLRQV DUH FRPSHQVDWHG DV WLPH

)ODW SODWH FROOHFWRU q2.) &. WR ',1 (1 DQG FHUWL:HG DFFRU WR q6RODU.H\PDUNr $FFRUGLQJ WI EDVLF UXOHV WKH DQQXDO FROOH DPRXQWV WR N: K P• 7KH FROO KHDW UHWXUQ IRUHFDVW LV EDVHG VXUIDFH DUHD RI P•

&RPSDULVRQ $QWLUH;HFWLYH JODVV q2.) &. r VWDQGDUG JODVV q2.) &6 r 7KH DQWLUH;HFWLYH JODVV RI WKH SODWH FROOHFWRU q2.) &. r LQFUI WXUQ JODVV E\ (VSHFLDOO\ G ZLQWHU ZLWK DQ LQFOLQHG LQFLG WKH WUDQVPLVVLRQ LV LPSURYHG FRPSDUHG ZLWK VWDQGDUG JODVV 7KH ZDWHU GRHV QRW IRUP GURSV QDQRVWUXFWXUH RI WKH DQWLUH; EXW GUDLQV DZD\ OLNH D WKLQ :O HIIHFWr

&RQVWUXFWLRQ RI WKH ;DW SODV

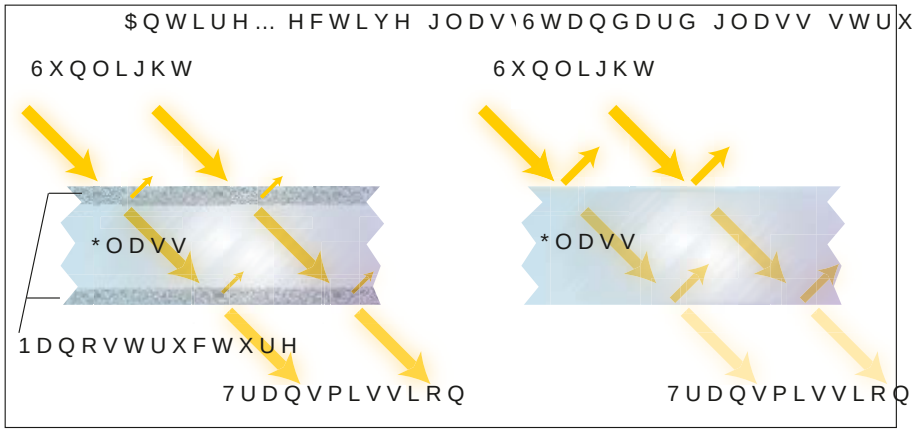


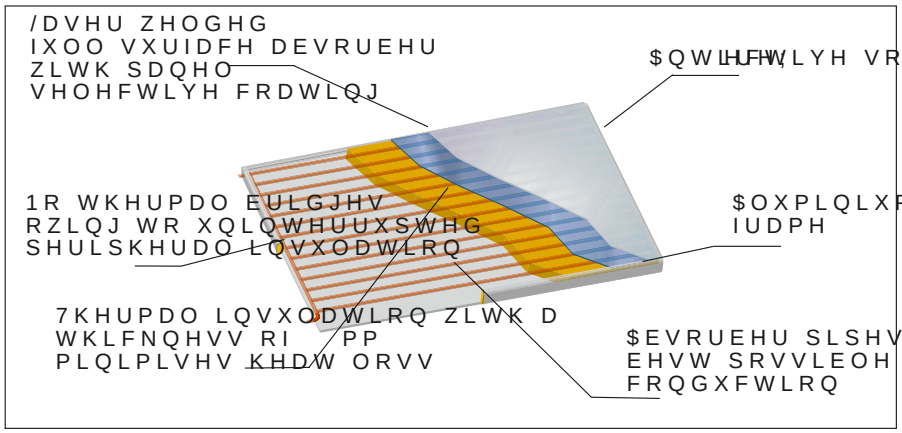

oventrop

# 6WDWLRQV q5HJ

6WDWLRQ q5HJXVRO (/+ r ZL
JURXS SXPS OHQJWK PP ZL
FRQWUROOHU q5HJWURQLF 5& 3
IRU DQ HIIHFWLYH GHDHUDWLR
WUDQVIHU PHGLXP LQ WKH VXS
&RQQHFWLRQ WR WKH VRODU F
FRPSUHVVLRQ ILWWLQJV q5HJX
&RPSOHWHO\ SUH DVVHPEOHG
VWDWLRQ ZLWK VDIHW\ JURXS
FRQQHFW DQ H[SDQVLRQ WDQN

6WDWLRQ q5HJXVRO 6+ r ZL
JURXS SXPS OHQJWK PP E
HOHFWURQLF FRQWUROOHU DQ
&RQQHFWLRQV
'1 *<PDOH WKUHDG FRPSUH
ILWWLQJV DFFR GLQJ WR '
'1 * PDOH WKUHDG IRU q5
FRPSUHVVLRQ ILWWLQJV

6WDWLRQ q5HJXVRO /+ r ZL
HOHFWURQLF FRQWUROOHU
&RQQHFWLRQV DV VWDWLRQ q5

3XPS FLUFXLW q5HJXVRO 3+
VDIHW\ JURXS &KHFN YDOYH L
EDOO YDOYH
&RQQHFWLRQV DV VWDWLRQ q5

6WDWLRQ q5HJXVRO /+ r '1 ZL
VDIHW\ JURXS SXPS OHQJWK PP
GHDHUDWRU IRU DQ HIIHFWLYH GHD
KHDW WUDQVIHU PHGLXP LQ WKH VX
&RQQHFWLRQ WR WKH VRODU FLUFX
FRPSUHVVLRQ ILWWLQJV q5HJXVROr
&RPSOHWHO\ SUH DVVHPEOHG DQG
VWDWLRQ ZLWK VDIHW\ JURXS DQG
FRQQHFW DQ H[SDQVLRQ WDQN

3XPS FLUFXLW q5HJXVRO 3+ r '1
ZLWK VDIHW\ JURXS

6WDWLRQ q5HJXVRO 6+ r '1 V
FRQVWUXFWLRQ DV VWDWLRQ q5HJX
EXW ZLWKRXW GHDHUDWRU

6WDWLRQ q5HJXVRO 6+ r '1 ZL
VDIHW\ JURXS &RQQHFWLRQ WR WK
* IODW VHDOLQJ

6RODU FLUFXLW 6XSSO\
6RODU FLUFXLW 5HWXUQ
%XIIHU VWRUDJH F\OLQGHU 5HWXUQ
%XIIHU VWRUDJH F\OLQGHU 6XSSO\
,QVXODWLRQ

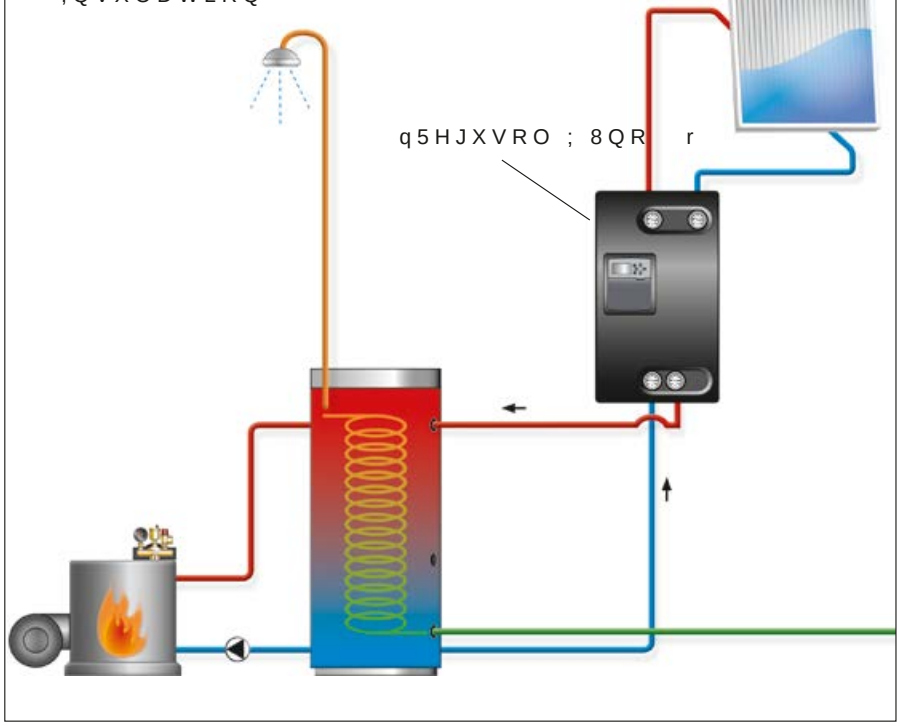


3URGXFW DVVHPEO\ ZLWK HOH
DQG KHDW H[FKDQJHU IRU D FR
WUDQVPLVVLRQ RI WKH KHDW
SULPDU\ FLUFXLW WR D EXIIH
VHFRQGDU\ FLUFXLW IRU LQ
VWRUDJH F\OLQGHUV ZLWKRXW
FRQQHFWLRQ

3ULPDU\ FLUFXLW XS WR 31
VWDUWLQJ WHPSHUDWXUH •&

6HFRQGDU\ FLUFXLW XS WR 31
FRQVWDQW RSHUDWLRQ

7KH VROGHUHG SODWH KHDW H
FRPSOLHV ZLWK WKH VSHFLILF
(XURSHDQ 3UHVVXUH (TXLSPHQ
3(' 'XH WR WXUEXOHQW IORZ
H[FHOOHQW VHOI FOHDQLQJ HI
DQG D FRQWDPLQDWLRQ LV DY

7KH VRODU FLUFXLW LV SURWH
H[FHVV SUHVVXUH E\ D VDIHW\
LQWHJUDWHG LQ WKH KHDW H[
7KH OHDN WHVWHG FRPSRQHQ
KHDW H[FKDQJHU V\VWHP DUH
ERDUG 7KH FRQWUROOHU LV F
LQWHUQDO HOHFWULF FRPSRQ
IROORZLQJ FRQQHFWLRQV

2XWSXW IRU VRODU FLUFXLW
2XWSXW IRU ORDGLQJ SXPS
7HPSHUDWXUH HQWULHV IRU
&ROOHFWRU KHDW H[FKDQJH
SULPDU\ VLGH KHDW H[FKDQ
VHFRQGDU\ VLGH WHPSHUD
EXIIHU VWRUDJH F\OLQGHU
HOHFWURQLF IORZ VHQVRU

3OLQ WH[W GLVSOD\ RI WKH F
RXWSXW 6 EXV

7KH KHDW H[FKDQJHU V\VWHP
LQVXODWHG DQG FDQ TXLFNO\
WKH SULPDU\ VLGH XVLQJ FRP
DQG WR WKH VHFRQGDU\ FLUF
DQG EH SXW LQWR RSHUDWLRQ
7KH DFWXDO KHDW WUDQVPLV\
t WKH DFKLHYHG IORZ WHPSHU
IORZ UDWH RI WKH SULPDU\ F
t WKH IORZ WHPSHUDWXUH GLI
WKH SULPDU\ DQG WKH VHFR
t WKH UHTXLUHG IORZ WHPSHU
IORZ UDWH RI WKH VHFRQGDU

0RGHO

e5HJXVRO ; 8QR q
6WDWLRQ ZLWK KHDW H[FKDQ
VRODU FLUFXLW FRQQHFWLR
ORDGLQJ FLUFXLW FRQQHFW
ZLWK RQH H[WHUQDOOHU FRQWUROOHU q5H
QXPEHU RI KHDW H[FKDQJHU S

q5HJXVRO ; 8QR r
6\VWHP LOOXVWUDWLRQ

# q5HJXVRO ; 'XRr 6WDWLRQ ZLWK

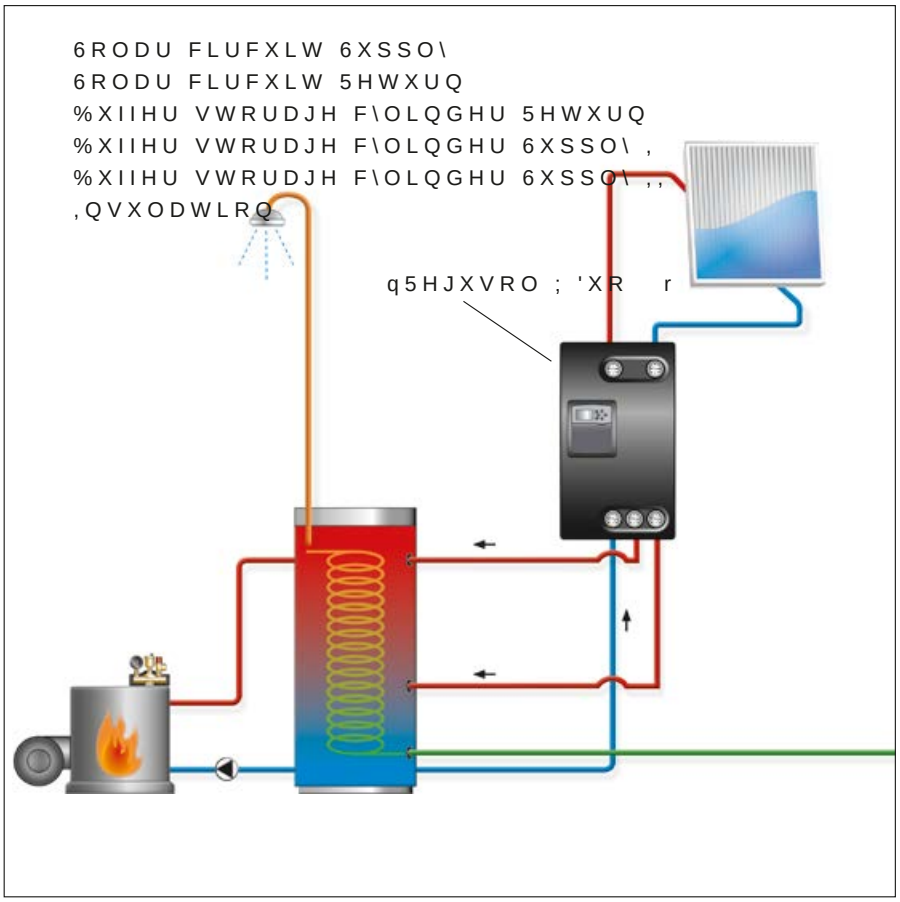


3URGXFW DVVHPEO\ ZLWK HOHFWUF
KHDW H[FKDQJHU WKUHH ZD\ FRQY
IRU VHFRQG ORDGLQJ FLUFXLW IRU
WUDQVPLVVLRQ RI WKH KHDW RI WK
SULPDU\ FLUFXLW WR D EXIIHU VW
VHFRQGDU\ FLUFXLW IRU LQVWDO
VWRUDJH F\OLQGHUV ZLWKRXW GLU
FRQQHFWLRQ

7KH WKUHH ZD\ YDOYH LQWHJUDWH
SLSH RI WKH VHFRQGDU\ FLUFXLW
FRQYHUVLRQ WR DQ DGGLWLRQDO
UXQQLQJ LQ SDUDOOHO IRU LQVWD
ORDGLQJ VHFWLRQ E\ VHFWLRQ RI
F\OLQGHU RU WKH WKHUPDO ORDGL
VWRUDJH F\OLQGHU
3ULPDU\ FLUFXLW XS WR 31 DQG
VWDUWLQJ WHPSHUDWXUH •&
6HFRQGDU\ FLUFXLW XS WR 31 DQ
FRQVWDQW RSHUDWLRQ

7KH VROGHUHG SODWH KHDW H[FKD
ZLWK WKH VSHFLILFDWLRQV RI WKH
3UHVVXUH (TXLSPHQW 'LUHFWLYH
WXUEXOHQW IORZ FRQGLWLRQV DQ
FOHDQLQJ HIIHFW LV SURGXFHG DQ
FRQWDPLQDWLRQ LV DYRLGHG
7KH VRODU FLUFXLW LV SURWHFWH
SUHVVXUH E\ D VDIHW\ JURXS LQWH
KHDW H[FKDQJHU V\VWHP 7KH OHD
FRPSRQHQWV RI WKH SODWH KHDW
V\VWHP DUH PRXQWHG RQ D ERUDG
FRQWUROOHU LV FDEOHG ZLWK WKH
FRPSRQHQWV DQG KDV WKH IROORZ
FRQQHFWLRQV

2XWSXW IRU VRODU FLUFXLW SXPS
2XWSXW IRU ORDGLQJ SXPS
2XWSXW IRU FRQYHUVLRQ YDOYH

7HPSHUDWXUH HQWULHV IRU
&ROOHFWRU KHDW H[FKDQJHU HQ
SULPDU\ VLGH KHDW H[FKDQJHU
VHFRQGDU\ VLGH WHPSHUDWXU
VWRUDJH F\OLQGHU ZLWK ORDGLQ
VHFWLRQ E\ VHFWLRQ LQWHUIDFH
IORZ VHQVRU

3ODLQ WH[W GLVSOD\ RI WKH FRQW
RXWSXW 6 EXV
7KH KHDW H[FKDQJHU V\VWHP LV FR
LQVXODWHG DQG FDQ TXLFNO\ EH F
WKH SULPDU\ VLGH XVLQJ FRPSUHV
DQG WR WKH VHFRQGDU\ FLUFXLW
DQG EH SXW LQWR RSHUDWLRQ
7KH DFWXDO KHDW WUDQVPLVVLRQ
t WKH DFKLHYHG IORZ WHPSHUDWXU
IORZ UDWH RI WKH SULPDU\ FLUFX
t WKH IORZ WHPSHUDWXUH GLIIHUH
WKH SULPDU\ DQG WKH VHFRQGDU
t WKH UHTXLUHG IORZ WHPSHUDWXU
UDWH RI WKH VHFRQGDU\ FLUFXLW

e5HJXVRO ; 'XR q
6WDWLRQ ZLWK KHDW H[FKDQJHU
VRODU FLUFXLW FRQQHFWLRQ
ORDGLQJ FLUFXLW FRQQHFWLRQ
ZLWK FRQWUROOHU q5HJXW
QXPEHU RI KHDW H[FKDQJHU SODW

q5HJXVRO ; 'XR r

6\VWHP LOOXVWUDWLRQ

# +RW SRWDEOH ZDWHU SUHSDUDWLRQ DQ
# %XIIHU VWRUDJH F\OLQGHU DQG VW
# SUHSDUDWLRQ q5

oventrop

## 6\VWHP LOOX

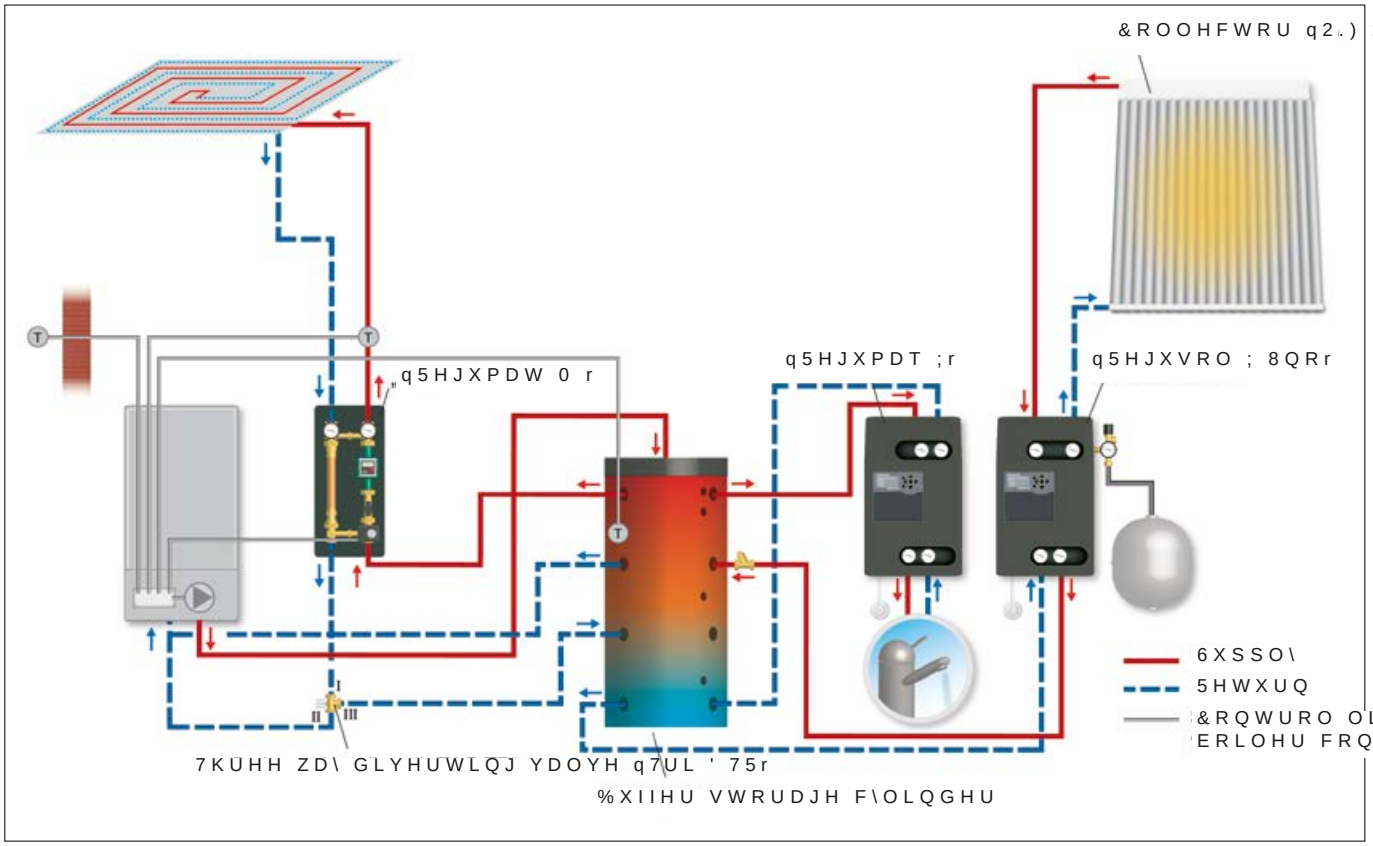


6RODU FLUFXLW
7KH VRODU SODQW LV FRQQHFWHG DQG FRQWUROOHG
YLD WKH VWDWLRQ q5HJXVRO ; 8QRr 7LWK
LQWHJUDWHG KHDW H[FKDQJHU DQG WKH LQWHJUDWHG
FRQWUROOHU q5HJWURQLF 5;r

5H ORDGLQJ RI WKH EXIIHU VWRUDJH F\OLQGHU

7KH EXIIHU VWRUDJH F\OLQGHU LV UH ORDGHG E\
WKH ERLOHU GHSHQGLQJ RQ WKH VWRUDJH F\OLQGHU
VHQVRU 7

+RW SRWDEOH ZDWHU
+RW SRWDEOH ZDWHU LV FRQQHFWHG &RQWURO 75 WHUPRVW
ZKHQ QHHGHG &RQWURO 75 WHUPRVW
1R KRW SRWDEOH ZDWHU LV YVWRUHG WKHUHIRUH WKH
LQVWDOODWLRQ LV K\JLHQLFDOOY VDIH

6XSSRUW RI WKH KHDWLQJ V\VW
WHPSHUDWXUH LQFUHDVH
&RQWURO 75 WHUPRVW
H[LVWLQJ ERLOHU FRQWURO 7K
RI WKH q5HJXPDW 0r VWDWLRQ
GHSHQGLQJ RQ WKH RXWVLGH W
,Q RUGHU WR XVH WKH VRODU H
VWRUDJH F\OLQGHU D UHWXUQ
LQFUHDVH LV UHDOLVHG YLD WK
q5HJWURQLF 5;r ,I WKH UHWXUQ
ORZHU WKDQ WKH VWRUDJH F\OI
WKH WKUHH ZD\ GLYHUWLQJ YDO
VZLWFKHG WR SRUW ,,,

(QHUJ\ IRU UHWXUQ WHPSHUDWX
WDNHQ IURP WKH VWRUDJH F\OI

# +RW SRWDEOH ZDWHU SUHSDUDWLRQ DQG V
# %XIIHU VWRUDJH F\OLQGHU DQG VWDWLRQ IR
# q5HJXPDT ;r
# /RDGLQJ VHFWLRQ E\ VHFWLRQ ZLWK V

oventrop

## 6\VWHP LOOXVW

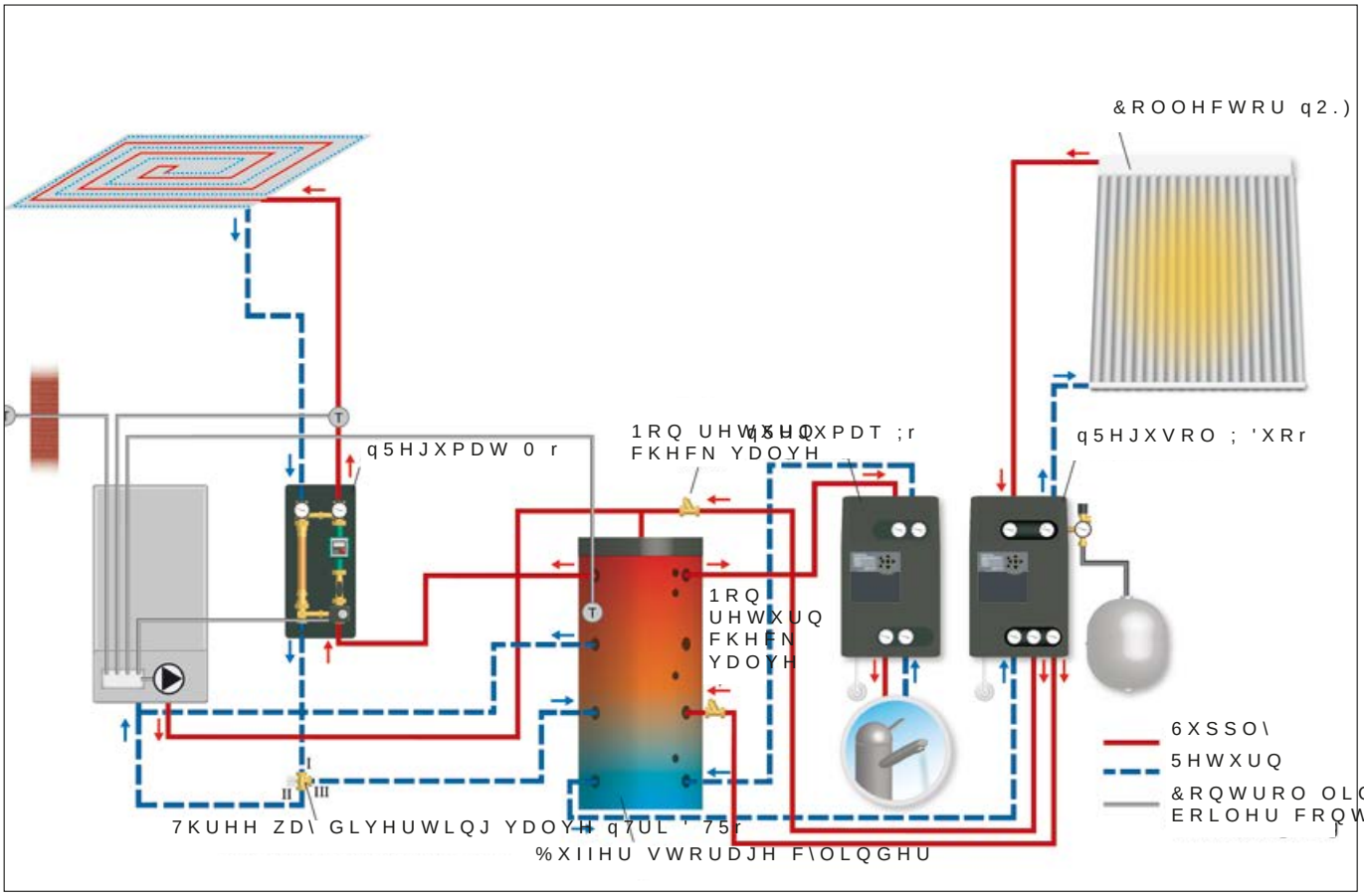


6RODU FLUFXLW

7KH VRODU SODQW LV FRQQHFWHG DQG FRQWUROOHG YLD WKH VWDWLRQ q5HJXVRO ; 'XR LQWHJUDWHG KHDW H[FKDQJHU DQG WKH LQWHJUDWHG FRQWUROOHU q5HJWURQLF 5;r WKH WHPSHUDWXUHV DYDLODEOH LQ WKH FROOHFWRU FLUFXLW WKH VWDWLRQ q5HJXVRO ; 'XR DOORZV IRU D ORGGLQJ RI WKH VWRUDJH F\OLQGHU VHFWLRQ E\ VHFWLRQ +LJK WHPSHUDWXUHV DUH VWRUHG LQ WKH XSSHU DQG ORZ WHPSHUDWXUHV LQ WKH PLGGOH VHFWLRQ RI WKH VWRUDJH F\OLQGHU 7KLV ZD\ HIILFLHQF\ RI WKH VRODU SODQW LV LQF HDVHG

5H ORGGLQJ RI WKH EXIIHU VWRUDJH F\OLQGHU

7KH EXIIHU VWRUDJH F\OLQGHU LV UH ORGGHG E\ WKH ERLOHU GHSHQGLQJ RQ WKH VWRUDJH F\OLQGHU VHQVRU 7

+RW SRWDEOH ZDWHU

+RW SRWDEOH ZDWHU LV VXSSOLHG E\ WKH VWDWLRQ IRU XRL3WWO RI SRWDEOH ZDWHU DQG WKH LQWHJUDWHG KHDW H[FKDQJHU LQ WKH FRQWURO LQH LR KRW SRWDEOH ZDWHU LV VWRUHG WKHUH LQ WKH PLGGOH VHFWLRQ RI WKH VWRUDJH F\OLQGHU

6XSSRUW RI WKH KHDWLQJ V\VWHP D

WHPSHUDWXUH LQFUHDVH

7KH q5HJXPDT ;r H[LVWLQJ ERLOHU FRQWURO 7KH PL q5HJXPDW 0 r VWDWLRQ LV DFWLYDW RQ WKH RXVLGH WHPSHUDWXUH

,Q RUGHU WR XVH WKH VRODU HQHU F\OLQGHU D UHWXUQ WHPSHUDWXU UHDOLVHG YLD WKH FRQWURROHU q5 ,I WKH UHWXUQ WHPSHUDWXUH LV O VWRUDJH F\OLQGHU WHPSHUDWXUH GLYHUWLQJ YDOYH q7UL ' 75r LV VZL

,,,

(QHUJ\ IRU UHWXUQ WHPSHUDWXUH L WDNHQ IURP WKH VWRUDJH F\OLQGH

# q5HJXPDT ; ;=
## 6WDWLRQV IRU KRW SRWDE

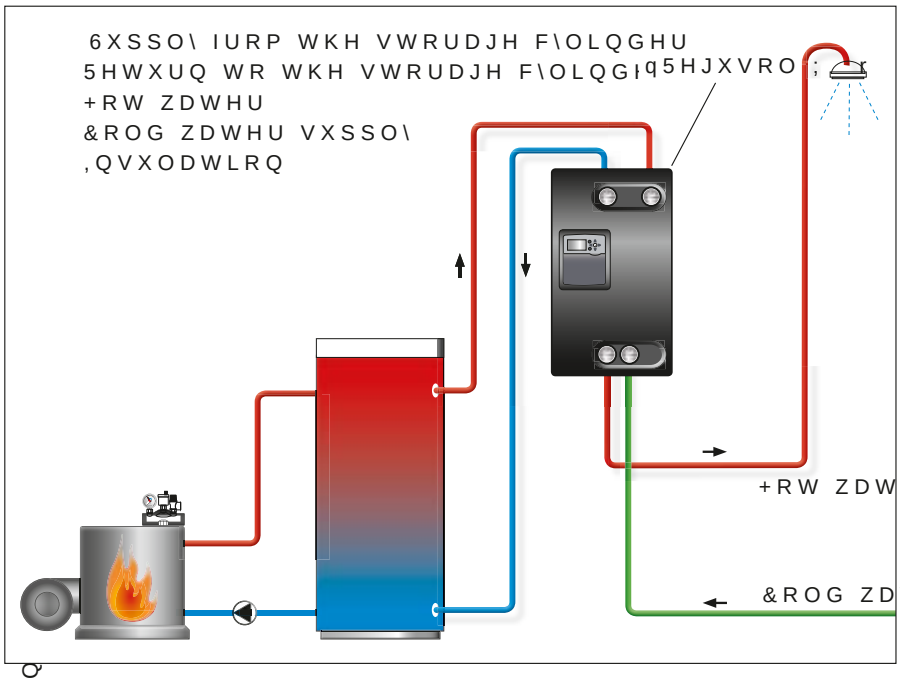


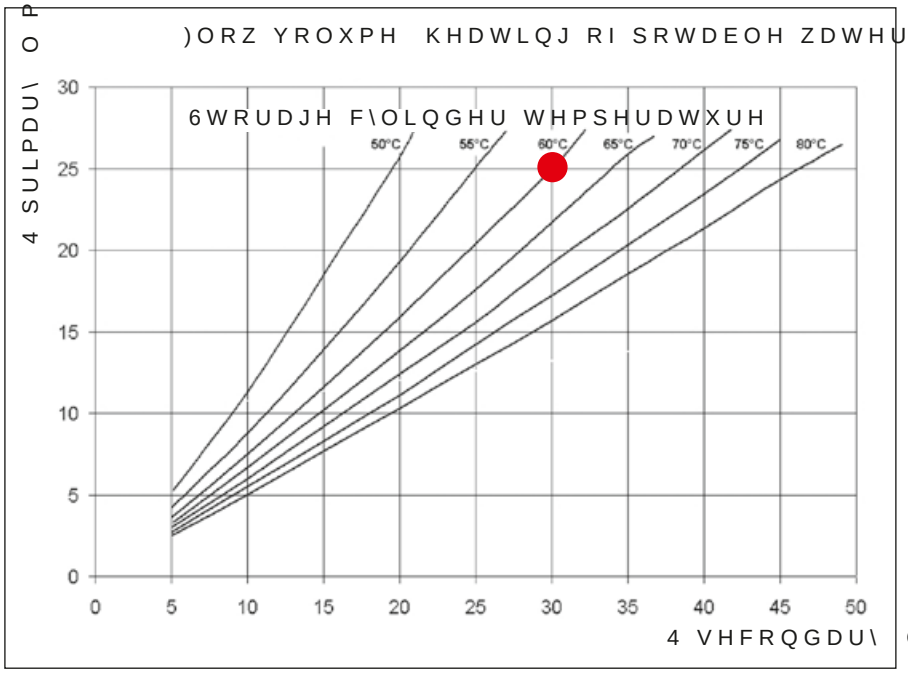


q5HJXPDT ; r
7KH 2YHQWURS VWDWLRQ q5HJXP
HOHFWURQLFDOO\ FRQWURODHG
ZLWK KHDW H[FKDQJHU IRU WKH
SRWDEOH ZDWHU SUHSDUDWLRQ
SULQFLSOH 7KH SRWDEOH ZDWH
WKH WLPH ZKHQ LW LV QHHGHG
$ KRW SRWDEOH ZDWHU UHVHUY
QHFHVVDU\

7KH SURGXFW DVVHPEO\ DOORZV
UHDOLVDWLRQ RI UHJHQHUDWLY
FRQ: JXUDWLRQV 7KH VWDWLRQ
VXLWDEOH IRU GHWDFKHG DQG
KRXVHV 7KH\ DUH FRQQHFWHG
F\OLQGHUV ZKLFK DUH KHDWHG
VROLG IXHOV JDV RU RLO

'HSHQGLQJ RQ WKH WHPSHUDWX
YROXPH RQ WKH SRWDEOH ZDWH
FLUFXLW WKH FLUFXODWLRQ S
SULPDU\ FLUFXLW LV VSHHG U

7KH SODWH KHDW H[FKDQJHU FD
XVLQJ WKH :OO DQG GUDLQ FRF
SULPDU\ DQG VHFRQGDU\ FLUFX
WXUEXOHQW ;RZ D JRRG VHOI
DYRLGLQJ D FRQWDPLQDWLRQ L

7KH SRWDEOH ZDWHU FLUFXLW
EDU VDIHW\ YDOYH

7KH OHDN WHVWHG FRPSRQHQW
H[FKDQJHU V\VWHP KDYH ;DW V
FRQQHFWLRQV DQG DUH PRXQW

q5HJXPDT ;= r
7KH 2YHQWURS VWDWLRQ q5HJXP
KRW SRWDEOH ZDWHU SUHSDUD
WKH VWDWLRQ q5HJXPDT ; r E
DVVHPEO\ IRU WKH RSHUDWLRQ
V\VWHPV LV DGGLWLRQDOO\ HTX
FLUFXODWLRQ SXPS LQ WKH SRW

7KH FRQWUROOHU LV IXOO\ FDE
HOHFWULF FRPSRQHQWV DQG VH
IROORZLQJ DGGLWLRQDO IXQFW

'HPDQG 7KH FLUFXODWLRQ IXQ
LI ZDWHU LV GUDZQ RII IRU D V
&\FOH 7KH FLUFXODWLRQ SXP
WR WKH VHW WLPH VZLWFKLQJ
7HPSHUDWXUH FRQWURO 7KH
UXQV GHSHQGDQW RQ WKH UHW
7KUHH VZLWFKLQJ SRLQWV ZLW
FRUUHVSRQGLQJ RSHUDWLQJ P
SURJUDPPHG HDFK GD\

q5HJXPDT •&WR r •&WDWLRQ IRU K
ZDWHU SUHSDUDWLRQ ZLWK HO

q5HJXPDT ;= r VWDWLRQ IRU
ZDWHU SUHSDUDWLRQ ZLWK HO
DQG DGGLWLRQDO SRWDEOH ZD

6\VWHP LOOXVWUDWLRQ q5HJX

'UDZ RII FDSDFLWLHV 4 VHFRQ
q5HJXPDTr VWDWLRQ GHSHQGLQJ
WHPSHUDWXUH LQ WKH EXIIHU V

([DPSOH VHH LOOXVWU

,I D WHPSHUDWXUH RI •& LV VH
D GUDZ RII YROXPH ;RZ RI O P
VHFRQGDU\ FDQ EH DFKLHYHG Z
WHPSHUDWXUH RI •& LQVLGH W
F\OLQGHU DQG D UHTXLUHG YRO
O PLQ LQ WKH EXIIHU FLUFXL

7KH SULPDU\ YROXPH ;RZ LV PR
SXPS LQ WKH VWRUDJH F\OLQGH
DFWLYDWHG E\ WKH FRQWUROO

oventrop

# q5HJXPDT .r
# &DVFDGH FRQWURO VHW IRU KRW SR
# &RQWURO FRQF

&DVFDGH FRQWURO VHW q5HJXPDT .
FRQVLVWLQJ RI
&DVFDGH FRQWURO DQG DFWXDWRU
YDOYHV IRU SRWDEOH ZDWHU VXSSO
7KH FDVFDGH FRQWURO VHW DOORZ
GLVFKDUJH FDSDFLW\ RI WKH VWDW
q5HJXPDTr XS WR O PLQ
0RGHOV

6HW IRU WKH FRQWURO RI q5HJXP
'LVFKDUJH FDSDFLW\ O PLQ ZLW
KRW ZDWHU WHPSHUDWXUH RI •&
FROG ZDWHU WHPSHUDWXUH RI •&
DFWXDWRUV ZLWK EDOO YDOYH

6HW IRU WKH FRQWURO RI q5HJX
'LVFKDUJH FDSDFLW\ O PLQ ZLW
KRW ZDWHU WHPSHUDWXUH RI •&
FROG ZDWHU WHPSHUDWXUH RI •&
DFWXDWRUV ZLWK EDOO YDOYH

6HW IRU WKH FRQWURO RI q5HJX
'LVFKDUJH FDSDFLW\ O PLQ ZL
KRW ZDWHU WHPSHUDWXUH RI •&
FROG ZDWHU WHPSHUDWXUH RI •&
DFWXDWRUV ZLWK EDOO YDOYH

q5HJXPDT ;= %r ZLWK q5HJXPDT .

6\VWHP LOOXVWUDWLRQ

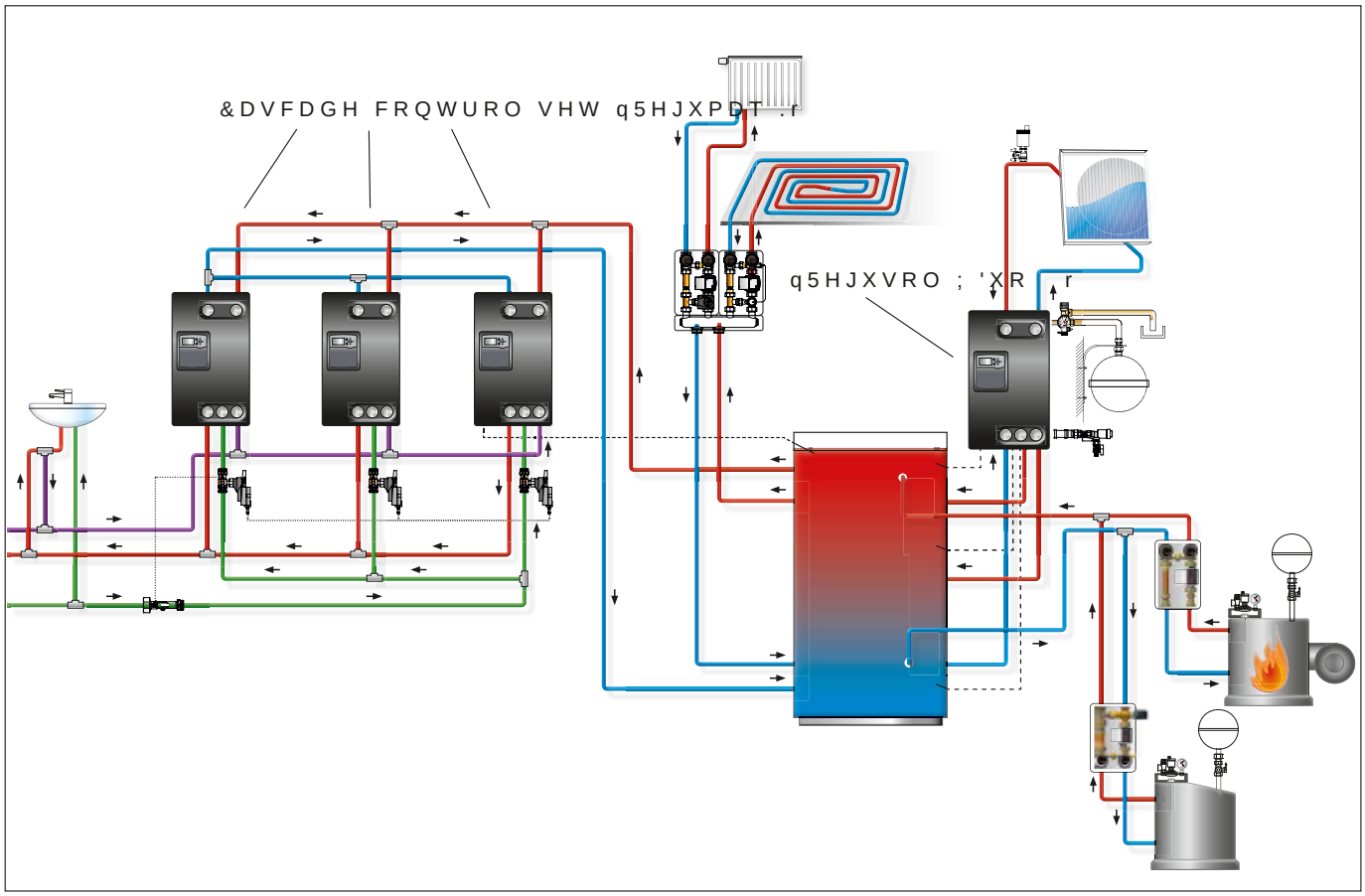

oventrop

# q5HJWURO
## &RQWUROOHUV IRU VRODU D

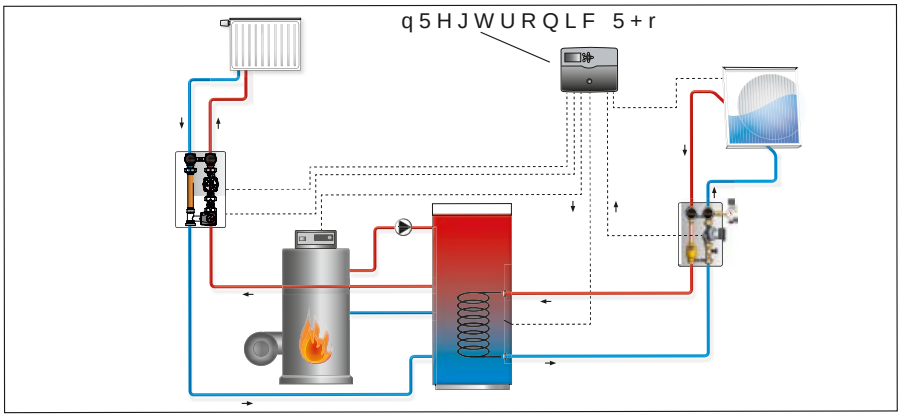


(U3 FODVVL:FDWLRQ KHDWLQJ FLUFXLW FRQWUROOHU q5HJWURQLF 5+r

| ,WHP QR &RQWURQOHU | 5HTXLUHG DFFHVVRULHV | %RLOHU FRQWURO PRGXODWLQJ 9 | 2Q 2II | (U3 &ODVV |
|---|---|---|---|---|
| q5HJWURQLF 5+r t | ; | | | ,, |
| q5HJWURQLF 5+r t | | ; | | ,,, |
| q5HJWURQLF 5+r LQFO UHPRWH FRQWURO ZLWK URRP WHPSHUDWXUH VHQVRU | ; | | | 9, |
| q5HJWURQLF 5+r LQFO UHPRWH FRQWURO ZLWK URRP WHPSHUDWXUH VHQVRU | | ; | | 9,, |
| q5HJWURQLF 5+r [ URRP LQFO UHPRWH FRQWURO ZLWK URRP WHPSHUDWXUH VHQVRU | ; | | | 9,,, |

(OHFWURQLF FRQWUROOHUV IRU Z
SUHLQVWDOOHG VZLWFKLQJ VFKH
RI D VRODU WKHUPDO SODQW DQG
UHJXODWLRQ 7KH FRPELQDWLRQ
VZLWFKLQJ VFKHPHV DQG IUHHO\
DGGLWLRQDO IXQFWLRQV DOORZV
SHUIRUP FRPSOH[ FRQWUROV
6RODU FRQWUROOHU q5HJWURQ
)OH[LEOH VRODU FRQWUROOHU IR
FRPSOH[ VRODU SODQWV $SDUW
RI VRODU SODQWV IRU KRW SRWD
WKH FRQWUROOHU LV PDLQO\ XVH
RI DGGLWLRQDO IXQFWLRQV VXFK
=RQH ORDGLQJ
6XSSRUW RI WKH KHDWLQJ V\VV
&RQWURO RI D FLUFXODWLRQ S
9DFDWLRQ IXQFWLRQ
7KH FRQWUROOHU LV SUHORDGHG
FRQ:JXUDWLRQV ZKLFK DOORZ IR
PDMRULW\ RI FRPPRQ SLSHZRUN
LQSXWV IRU 37 37 RU .7
RXWSXWV LV D YROW IUHH U
DQDORJXH LQSXW *UXQGIRV 'L
6HQVRUVw
LQSXW ;RZ 5RWRU
SXOVH LQSXW 9 FRQYHUWLE
37 37 RU .7<
3:0 RXWSXWV
'DWD RXWSXW 6 EXV
VRODU EDVLF V\VWHPV HDFK
K\GUDXOLF YDULDQWV
$XWRPDWLF IXQFWLRQDO FRQWU
DFFRUGLQJ WR 9',
+HDWLQJ FLUFXLW FRQWUROOH
:HDWKHU JXLGHG FRQWURO RI WKH
RI WKH KHDWLQJ V\VWHP YLD WKH
JHQHUDWRU DQG RU D PL[LQJ YDO
0 r RU q5HJX;RRU +:r ZLWK WKUHH
YDOYH 7KH KHDWLQJ FLUFXLW FR
RQH YDULDEOH WHPSHUDWXUH FL
FRQVWDQW WHPSHUDWXUH FLUFXL
([WHQGDEOH WR XS WR YDULDEO
FLUFXLWV DQG FRQVWDQW WHPS
WKH H[WHQVLRQ PRGXOH q5HJWUR

VHQVRU LQSXWV
LQSXWV IRU HOHFWURQLF YRO
VHQVRUV
RXWSXWV LV D YROW IUHH U
3:0 9 RXWSXWV FRQYHUWLE
GDWD RXWSXW 6 EXV
6' FDUG VORW
6\VWHP FRQWUROOHU q5HJWURQ
7KH V\VWHP FRQWUROOHU FRQWU
(DVW :HVW URRI RULHQWDWLRQ D
F\OLQGHUV DV ZHOO DV ZHDWKHU
FRQVWDQW WHPSHUDWXUH FLUF
ORDGLQJ IXQFWLRQV VXFK DV VW
ORDGLQJ VHFWLRQ E\ VHFWLRQ
KHDW GHPDQG ERLOHU ORDGLQJ
PL[LQJ YDOYH FRQWURO PHDVXU
FRQVXPSWLRQ WXEH FROOHFWRU
EDFN RSWLRQ WKHUPRVWDW IXQ
WKHUPDO GLVLQIHFWLRQ FLUFXO
IXQFWLRQV PD\ EH DFWLYDWHG Y
XVHU FRPPDQG 8S WR H[WHQVL
q5HJWURQLF (0r LWHP QR
FRQQHFWHG WR WKH q5HJWURQLF
D WRWDO QXPEHU RI UHOD\ RXV
SLSHZRUN FRQ:JXUDWLRQV
VHQVRU LQSXWV
LQSXWV IRU HOHFWURQLF YR
VHQVRUV
SXOVH LQSXWV
RXWSXWV LV D YROW IUHH
3:0 9 RXWSXWV FRQYHUW
GDWD RXWSXW 6 EXV
6' FDUG VORW
6\VWHP LOOXVWUDWLRQ
(U3 FODVVL:FDWLRQ

oventrop

# q5HJXFRU :+6r (QHUJ\ VWRU

+HDWLQJ V\VWHPV ZLWK UHJHQHUDW
VRXUFHV FRQVLVW RI YDULRXV FRPS
DUH RIWHQ LQVWDOOHG VHSDUDWHO
FR RUGLQDWHG

7KLV SUREOHP LV VROYHG E\ WKH 2Y
VWRUDJH FHQWUH q5HJXFRU :+6r ,W
KHDWLQJ ZDWHU VWRUDJH F\OLQGHU
VWRUDJH DQG FRPSRQHQWV ZKLFK D
K\GUDXOLFDOO\ FR RUGLQDWHG 7KH
PDQDJHPHQW RI WKH LQWHJUDWHG V
FRQWUROOHU JXDUDQWHHV DQ RSWL
EHWZHHQ WKH KHDWLQJ ZDWHU VWRU
DQG DOO RWKHU FRPSRQHQWV

7KH q5HJXFRU :+6r ZKLFK DOORZV IR
DQG VSDFH VDYLQJ LQVWDOODWLRQ
FRQQHFWHG WR GLIIHUHQW KHDW JH
2YHQWURS HQHUJ\ VWRUDJH FHQWUH
:+6r FRQVLVWV RI

- 6RODU VWDWLRQ
- 3RWDEOH ZDWHU VWDWLRQ
- +HDWLQJ FLUFXLW VWDWLRQ
- 3RWDEOH ZDWHU VWDWLRQ
- +HDW JHQHUDWRU FRQQHFWLRQ
  H J ERLOHU KHDW SXPS HWF
- (QHUJ\ VWRUDJH FHQWUHq5HJXFRU

/DEHO
(QHUJ\ HIILFLHQF\ FODVV $ IRU q5HJXFR
W\SH

'LPHQVLRQV DQG WHFKQLFDO VSH
RI WKH HQHUJ\ VWRUDJH FHQWUH q5
W\SHV DQG

| 7HFKQLFDO GDWD | 8QLW | 7\SH | 7\SH | 7\SH |
|---|---|---|---|---|
| (QHUJ\ HIILFLHQF\ FODV | | $ | | |
| 0D[ SLYRW KHLJKW ZLWKRXW LQVXODWLRQ | PP | | | |
| 7KLFNQHVV RI VWRUDJH F\OLQGHU LQVXODWLRQ | PP | | | |
| 3HUPLVVLEOH RSHUDWLQJ SUHVVXUH | EDU | | | |
| 3HUPLVVLEOH RSHUDWLQJ SUHVVXUH FRLO | EDU | | | |
| 3HUPLVVLEOH RSHUDWLQJ WHPSHUDWXUH | &° | | | |
| 3HUPLVVLEOH RSHUDWLQJ WHPSHUDWXUH FRLO | &° | | | |
| 6RODU KHDWLQJ FRLO | P | | | |
| :HLJKW LQFO LQVXODWLRQ | NJ | DSSUR[ | DSSUR[ | DSSUR[ |

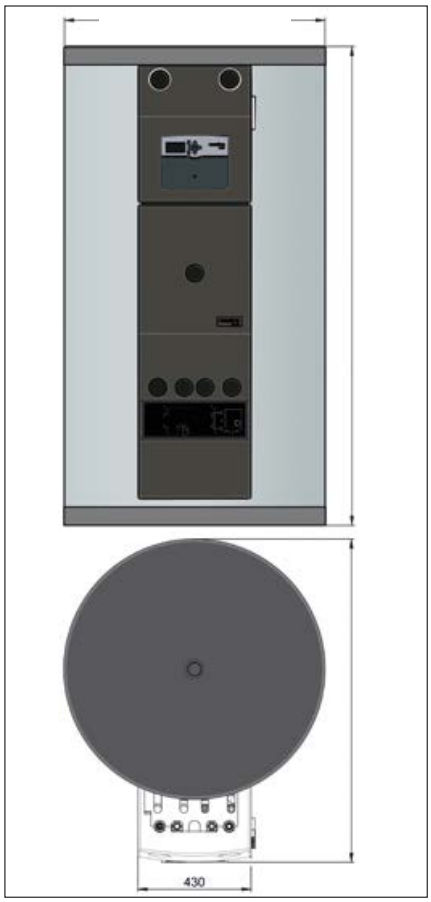

| | 7HFKQLFDO GDWD | 7\SH | 7\SH | 7\SH |
|---|---|---|---|---|
| | (QHUJ\ HIILFLHQF\ FODV | & | & | % |
| + | 7RWDO KHLJKW | PP | | |
| ' | 'LDPHWHU ZLWKRXW LQVXODWLRQ | PP | | |
| | 'LDPHWHU ZLWK LQVXODWLRQ | PP | | |
| | 1RPLQDO FRQWHQW | O | | |
| | 9RORXPH LQ VWDQG EO\ | O | | |
| | &RQWHQW VRODU KHDWLQJ FRLO | O | | |
| | &RQWHQW KHDWLQJ FRLO | O | | |
| | 0D[ SLYRW KHLJKW | PP | | |
| | 7KLFNQHVV RI VWRUDJH F\OLQGHU LQVXODWLRQ 385 ULJLG IRDP | PP | | |
| | 3HUPLVVLEOH RSHUDWLQJ WHPSHUDWXUH SRWDEOH ZDWHU | &&r | | |
| | 3HUPLVVLEOH RSHUDWLQJ WHPSHUDWXUH 65 69 +5 +9 | &&r | | |
| | 3HUPLVVLEOH RSHUDWLQJ SUHVVXUH SRWDEOH ZDWHU | EDU | | |
| | 3HUPLVVLEOH RSHUDWLQJ SUHVVXUH 65 69 +5 +9 | EDU | | |
| | 6RODU KHDWLQJ FRLO 65 69 | P | | |
| | +HDWLQJ FRLO +5 +9 | P | | |
| | :HLJKW LQFO LQVXODWLRQ | NJ | DSSUR[ | DSSUR[ | DSSUR[ |

%LYDOHQW VRODU VWRUDJH F\OLQGHU q+\GURFRU :%r

| | 7HFKQLFDO GDWD | 7\SH | 7\SH | 7\SH | 7\SH | 7\SH |
|---|---|---|---|---|---|---|
| | (QHUJ\ HIILFLHQF\ FODV | & | | | | $ $ |
| + | 7RWDO KHLJKW | PP | | | | |
| ' | 'LDPHWHU ZLWKRXW LQVXODWLRQ | PP | | | | |
| | 'LDPHWHU ZLWK LQVXODWLRQ | PP | | | | |
| | 1RPLQDO FRQWHQW | O | | | | |
| | 9RORXPH LQ VWDQG EO\ | O | | | | |
| | &RQWHQW VRODU KHDWLQJ FRLO | O | | | | |
| | 0D[ SLYRW KHLJKW ZLWKRXW LQVXODWLRQ | PP | | | | |
| | 7KLFNQHVV RI VWRUDJH F\OLQGHU LQVXODWLRQ ILEUH IQHHF | PP | | | | |
| | 3HUPLVVLEOH RSHUDWLQJ SUHVVXUH | EDU | | | | |
| | 3HUPLVVLEOH RSHUDWLQJ SUHVVXUH FRLO | EDU | | | | |
| | 3HUPLVVLEOH RSHUDWLQJ WHPSHUDWXUH | &&r | | | | |
| | 3HUPLVVLEOH RSHUDWLQJ WHPSHUDWXUH FRLO | &&r | | | | |
| | 6RODU KHDWLQJ FRLO | P | | | | |
| | :HLJKW LQFO LQVXODWLRQ | NJ | DSSUR[ | DSSUR[ | DSSUR[ | DSSUR[ | DSSUR[ |

6RODU EXIIHU VWRUDJH F\OLQGHU q+\GURFRU +6q

%XIIHU VWRUDJH F\OLQGHU q+\GU

7KH VWRUDJH F\OLQGHU VWRU
KHDWHG E\ VRODU HQHUJ\

%XIIHU VWRUDJH F\OLQGHUV D
VRODU EXIIHU VWRUDJH F\OLQ
KHDW H[FKDQJHU IRU WKH VRO
SXUH EXIIHU VWRUDJH F\OLQG
H[FKDQJHU

7KH PRVW FRPPRQ SRWDEOH Z
F\OLQGHUV LQ D VRODU SODQ
ELYDOHQW VWRUDJH F\OLQGH
F\OLQGHU FDQQRW RQO\ EH O
KHOS RI VRODU HQHUJ\ EXW L
UH ORDGHG E\ DQRWKHU HQH
W\SH RI VWRUDJH F\OLQGHU I
LQWHUQDO KHDW H[FKDQJHUV

7KH ELYDOHQW VWRUDJH F\OL
ZDWHU VKRXOG QRW EH RYHU
SUHVHQWV D ULVN RI JHUPV D
EH LPSDLUHG

7KH UXOH RI WKXPE IRU GLPH
&HQWUDO (XURSH LV DV IROO

+RW SRWDEOH ZDWHU SUHSDU

6WRUDJH F\OLQGHU YROXPH R
SHU VTXDUH PHWHU RI LQVW
VXUIDFH

+RW SRWDEOH ZDWHU SUHSDU
VXSSRUW RI WKH KHDWLQJ V\
6WRUDJH F\OLQGHU YROXPH R
SHU VTXDUH PHWHU RI LQVW
VXUIDFH

%LYDOHQW SRWDEOH ZDWHU
q+\GURFRU :%r ZLWK LQWHUQD
H[FKDQJHU IRU VRODU KHDWL
KHDWLQJ

3XIIHU VWRUDJH F\OLQGHU q
VWRUDJH RI KHDWLQJ ZDWHU

7HFKQLFDO GDWD q+\GURFRU

7HFKQLFDO GDWD
6RODU EXIIHU VWRUDJH F\OL
+6r %XIIHU VWRUDJH F\OLQGH

,QVXODWLRQ 385 ULJLG IRDP FD
&RPSRXQG LQVXODWLRQ

65 6RODU UHWXUQ
69 6RODU VXSSO\
+5 +HDWLQJ UHWXUQ
+9 +HDWLQJ VXSSO\

oventrop

# q6RODUr 'LDSKUDJP H[SDQVLRQ W
# 3LSHV DQG ILW

6SHFLDO H[SDQVLRQ WDQN IRU VF
ZLWK D QRPLQDO YROXPH RI
O

3HUPLVVLEOH RSHUDWLQJ WHPSHU
0D[ RSHUDWLQJ SUHVVXUH

'LDSKUDJP WHVWHG DFFRUGLQJ WR
7 DSSUR DFFRUGLQJ WR 3UHVVX
(TXLSPHQW 'LUHFWLYH 3(' (&

,Q OLQH WDQN ZLWK D QRPLQDO Y
RU O IRU WKH SURWHFWLRQ RI W
H[SDQVLRQ WDQN DQG WKH VRODU
H[FHVV WHPSHUDWXUHV

7KH LQ OLQH WDQNV DUH IRU LQVW
WKH q2.)r IODW SODWH FROOHFWRU
YHUWLFDOO\ RU LQ FHQWUDO URRI
ZLWK VKRUW SLSHV
0D[ RSHUDWLQJ SUHVVXUH

$SSURYHG DFFRUGLQJ WR 3UHVV
'LUHFWLYH 3(' (*

2YHQWURS RIIHUV DQ H[WHQVLYH
DFFHVVRULHV H J VWDLQOHVV VW
SLSH IRU URRI FRQQXLW FRQQHFW
IRU VHULHV FRXSOLQJ RI VHYHUDO
FROOHFWRUV LQWR D ODUJH FROOH
FRQQHFWLRQ RI q2.3 r WXEH FR
VHH DOVR SDJH

:LWKRXW LOOXVWU 2YHQWURS RII
FRQQHFWLRQ ILWWLQJV IODW VHD
FRPSUHVVLRQ FRQQHFWLRQ IRU W
FRQQHFWLRQ RI WKH q2.3 r WXE
FROOHFWRUV WR WKH VRODU FLUF

oventrop

# )XUWKHU SURGXFWV IRU WK

)ORZ PHDVXULQJ DQG UHJXOD
ZLWK LVRODWLRQ IDFLOLW\ IR
q5HJXVRO r O PLQ

9HQWLQJ FLUFXLW IRU UHSOD
DW H[LVWLQJ VWDWLRQV q5HJX
FRQVLVWLQJ RI
%DOO YDOYH ZLWK LQWHJUDW
WKHUPRPHWHU DQG GHDHUDW

)LOOLQJ DQG IOXVKLQJ GHYL
,VRODWLQJ EDOO YDOYH ZLWK
FRQQHFWLRQ IRU IILOOLQJ DQG
WR EH LQVWDOOHG DW WKH OR
VRODU FLUFXLW

)LOOLQJ SXPS q5HJXVROr
0DQXDO IILOOLQJ SXPS ZLWK K
FRQQHFWLRQ DQG EDOO YDOYH
DQG SUHVVXUH VLGH

7KUHH ZD\ PL[LQJ YDOYH DQG
WHPSHUDWXUH FRQWURORHU Z
VHQVRU LV XVHG IRU LQGXVW
LQVWDOODWLRQV ZDWHU KHD
GLVKZDVKHUV VXUIDFH KHDWL
RU VLPLODU 7KH FRQWURO UD
OLPLWHG RU ORFNHG

&RQQHFWLRQ VHW q5HJXVROr
)RU WKH FRQQHFWLRQ RI D GL
H[SDQVLRQ WDQN WR WKH VRO
q5HJXVROr &RQVLVWLQJ RI D
EUDFNHW PDGH RI VWHHO TXL
IRU GLDSKUDJP H[SDQVLRQ WD
FRUUXJDWHG SLSH

&LUFXODWLRQ VWDWLRQ q5HJ
ELYDOHQW VWRUDJH F\OLQGHU
LQVXODWHG SXPS DVVHPEO\ F
D WKHUPRVWDWLF PL[LQJ YDO
•& ZLWK IDLO VDIH IXQFWLRQ
FKHFN YDOYHV DQG LVRODWLQ
ZLWK LQWHJUDWHG WKHUPRPH
VWDWLRQ LV LQVWDOOHG EHW
SRWDEOH ZDWHU VWRUDJH F\O
FLUFXODWLRQ V\VWHP 7KH VW
WR DGMXVW WKH WHPSHUDWXU
FLUFXODWLRQ V\VWHP WR WKH
WKHUPRVWDWLF PL[LQJ YDOYH
ZDWHU LV GUDZQ RII

7KHUPRVWDWLF PL[LQJ YDOY
q%UDZD 0L[r
PDGH RI EURQ]H IRU SRWDEOH
LQVWDOODWLRQV 31 XS WR
&RQWURO UDQJH •&

%UDVV EDOO YDOYH q2SWLO
ZLWK PDOH RU IHPDOH WKUHD
ZLWK FRXQWHUQXW KDQGOH Z
ZLWK KRVH FRQQHFWLRQ VRIW
FDS

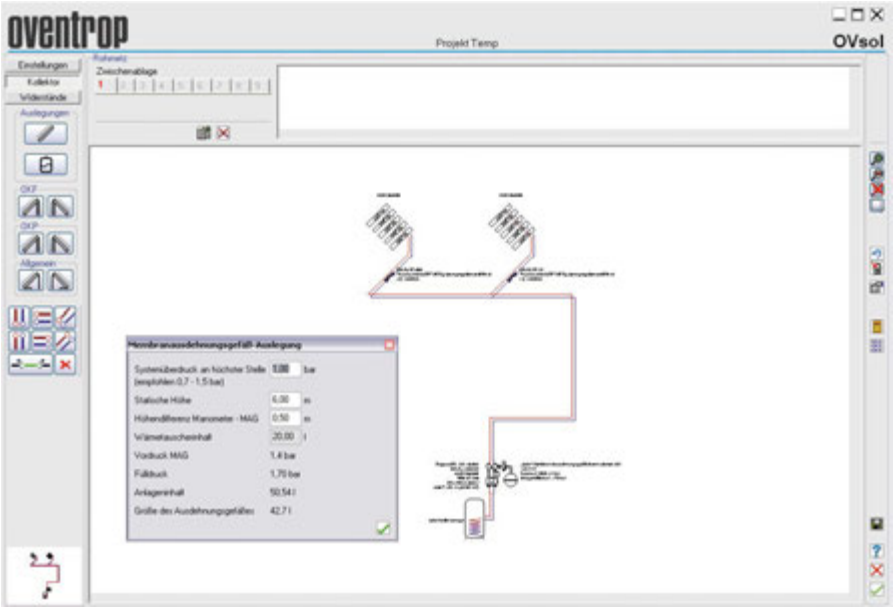


2YHQWURS VXSSRUW WKHLU SDUW
WKHRUHWLFDO DQG SUDFWLFDO VH
&RPSHWHQW LQVWUXFWRUV UHSRU
JXLGHOLQHV VWDQGDUGV DQG SRV
VSRQVRUVKLSV
3UDFWLFDO H[DPSOHV FODULI\ WKH
DQG WKH XVHIXO LQWHJUDWLRQ RI
FRPSRQHQWV DQG FRPSOHWH V\VW
VRODU FLUFXLW KRW SRWDEOH ZD
DQG VXSSRUW RI WKH KHDWLQJ V\V
LQFOXGLQJ XQGHUIORRU DQG ZDO

7KH GHVLJQ RI D VRODU SODQW F
RXW RQOLQH LQ WKH VRIWZDUH PH
2YHQWURS KRPHSDJH ZZ RYHQWUF
'LVWLQFWLRQ LV PDGH EHWZHHQ K
ZDWHU SUHSDUDWLRQ DQG KRW SR
SUHSDUDWLRQ ZLWK VXSSRUW RI W
V\VWHP $ ZRUOGZLGH FOLPDWH GD
FDQ EH DFFHVVHG 7KH QXPEHU RI
DQG WKH VXLWDEOH VWRUDJH F\OL
FDOFXODWHG DFFRUGLQJ WR WKH F
UHODWHG GDWD IRU LQVWDQFH QX
SHUVRQV KHDW ORDG RU HQHUJ\ F
7KH FDOFXODWLRQ VXSSOLHV LQIR
KHDW UHWXUQ WKDYLHQ DVQ &2

7KH HIILFLHQF\ RI D VRODU WKHU
GHSHQGV RQ WKH K\GURQLF LQWHJ
GLPHQVLRQLQJ (VSHFLDOO\ WKH V
KDV WR EH GHVLJQHG WR WKH RSW
WR DYRLG D UHGXFWLRQ RI WKH HI
E\ XQQHFHVVDULO\ KLJK SXPS RXW
'LPHQVLRQLQJ RI WKH FRPSRQHQW
RXW ZLWK WKH KHOS RI WKH 2YHQW
FDOFXODWLRQ SURJUDPPH q29VROr
RQ WKH FKRLFH RI D KLJK RU ORZ I
WKH SURJUDPPH GHWHUPLQHV WKH
WKH SLSH GLDPHWHU WKH SXPS KH
YROXPH RI WKH GLDSKUDJP H[SDQV
$ERYH DOO WKH SUHVHWWLQJ YDO
GRXEOH UHJXODWLQJ DQG FRPPLVV
IRU WKH K\GURQLF EDODQFH RI VH
ILHOGV FDQ EH FDOFXODWHG

%RWK SURJUDPPHV FDQ EH GRZQOF
XVHG RQ WKH 2YHQWURS KRPHSDJH
FKDUJH

)XUWKHU LQIRUPDWLRQ FDQ EH IRX
2YHQWURS FDWDORJXH q3URGXFWV
WHFKQLFDO GDWD VKHHWV DV ZHOO
LQWHUQHW SURGXFW UDQJH DQ

6XEMHFW WR WHFKQLFDO PRGLILFD
QRWLFH

)RU DQ RYHUYLHZ RI RXU JOREDO S
ZZZ RYHQWURS GH

3URGXFW UDQJH &RPSRQHQWV &RPSDFW IUHH
0:FKOULQJ &HDFKLQJ
35

29(17523 *PE+ &R .*
3DXO 2YHQWURS 6WUD¼H
' 2OVEHUJ *HUPDQ\
3KRQH
)D[
( 0DLO
,QWHUQHW